Cunningham Campers, Inc.
5201 Highway 62
Jeffersonville, IN 47130
1-812-284-0276 Option 3

Welcome to our Used Jayco Owners' Group

We Know Jayco Parts!

As a group member you receive **10% OFF** any order for parts, not already on sale. Just call us **with your VIN #** and we will find what you need and ship it directly from Jayco to your front door.

Like Jayco, we are family owned and operated. Our courteous professionals are here to help make your shopping experience as pleasant as humanly possible.

1-812-284-0276

Use Option 3 For Parts

http://parts.cunninghamcampers.com/jaycoclub

Cunningham's – Selling & Servicing Jayco RV's for OVER 38 Years!

Jayco INCORPORATED

MIDDLEBURY, INDIANA
HARPER, KANSAS

OWNER'S MANUAL

YOUR NEW JAYCO IS YOUR PASSPORT TO A WHOLE WORLD OF NEW FRIENDS, CAMPING FUN AND TRAVEL ADVENTURE WHEN YOU JOIN THE THOUSANDS OF JAYCO FAMILIES WHO MAKE UP THE . . .

JAYCO JAFARI INTERNATIONAL TRAVEL CLUB

You will find us enjoying the friendship and fellowship of JAFARI CAMPING as we join our local area FLIGHTS at hundreds of weekend camp-outs all over North America each month . . .

WE'RE THE FAMILIES OF JAYCO!

There are special STATE, REGIONAL and INTERNATIONAL RALLIES where you can join with your fellow JAFARIANS and their flights to enjoy a special kind of togetherness . . . fun, games, and entertainment provide memories to last a lifetime.

And . . . how about the exotic surroundings of NEW ORLEANS, the sounds and color of NASHVILLE and the GRAND OLE OPRY, the roar and rush of the INDIANAPOLIS 500, the quiet surroundings of the CANADIAN ROCKIES, the color of the SMOKY MOUNTAINS in the Fall. These and many other adventures can be yours when you join the. . .

JAYCO JAFARI INTERNATIONAL TRAVEL CLUB

Fill in the blanks on the reverse side, cut along dotted line and mail along with a check to:

JAYCO JAFARI INT'L TRAVEL CLUB

ATTN: Membership Coordinator

P.O. Box 192

Osceola, IN 46561-0192

Yes, it's for everyone with a JAYCO RV; young couples just starting out, families spending quality time together, the young at heart expanding their life experiences. Whether you belong to another camping club, have always traveled alone, or are just starting, don't miss out on one of the most priceless benefits of being an RV family . . . meet new friends and spend a bit of your camping life with some of the finest people you will ever have the opportunity to share a campfire or treasure a moment of golden living with a . . FIFTH-WHEEL TRAVEL TRAILER. . .SPORT UTILITY TRAILER . . . CONVENTIONAL TRAVEL TRAILER . . . TYPE C MOTORHOME . . . FOLDING CAMPING TRAILER . . . it doesn't matter. If you are a JAYCO RV FAMILY, then you are eligible to become a Jayco Jafari Member.

YOU WILL NEVER BE SORRY YOU MADE THE DECISION!

Your membership entitles you to:

- Special international decals for your unit.
- The Hitch newsletter with schedules of upcoming events and activities.
- A membership roster - containing the names and addresses of current members of the club will be sent bi-yearly.
- Discount Cards for several national theme parks including Six Flags and Busch Corp. Parks.
- A special price is available on Wheeler's Campground Guides.
- Discounts with Hertz Rental Car.
- Discounts with Coach Net, an emergency roadside service.
- Farm & City Insurance has RV insurance available at discounted rates to current Jayco Jafari International Club members.
- All of this, plus the joy of meeting new friends and enjoy Jafari adventures around the country.

Start with the first phase of your camping life...just complete the following application and forward it to the Jayco Jafari International Travel Club office. Your membership application may also be completed online, by visiting our website at www.jaycorvclub.com. If you have further questions, contact the club office direct at the website or by calling 800-262-5178. Local calls can be made to 574-258-0571.

WELCOME TO THE JAFARI FAMILY!

TO: Membership Coordinator for the Jayco Jafari International Travel Club

Please enroll us as members in the Jayco Travel Club. We are ready to roll to where the "friends we just haven't met yet" have the coffee on the fire and are waiting for us to arrive: We are ...

Name:_____ Spouse: _____

Address:_____ Phone: _____

City:_____ State: _____Zip: _____

Email:_____

Ages of Children at Home:_____

Our JAYCO is a:_____Our Dealer _____
(type & size)

Membership Dues:

One year	$25.00	Amount enclosed. $_____
Two years:	$45.00	Check #: _____
Three years:	$65.00	

_____ _____
(signature) (date)

Jayco INCORPORATED

OWNER'S MANUAL

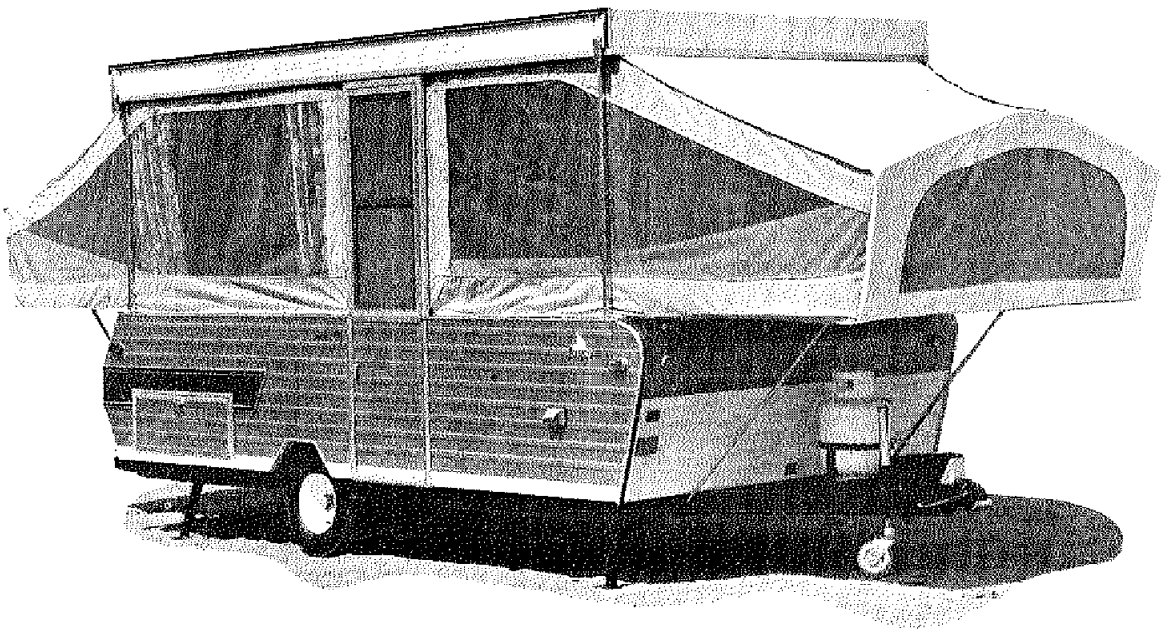

OWNER'S MANUAL

This manual has been prepared to acquaint you with the operation and maintenance of your JAYCO tent camper. Please read it carefully and follow its recommendations to assure the most enjoyable and trouble-free operation of your camper. Listed on this and the following pages are subjects that deserve your special attention.

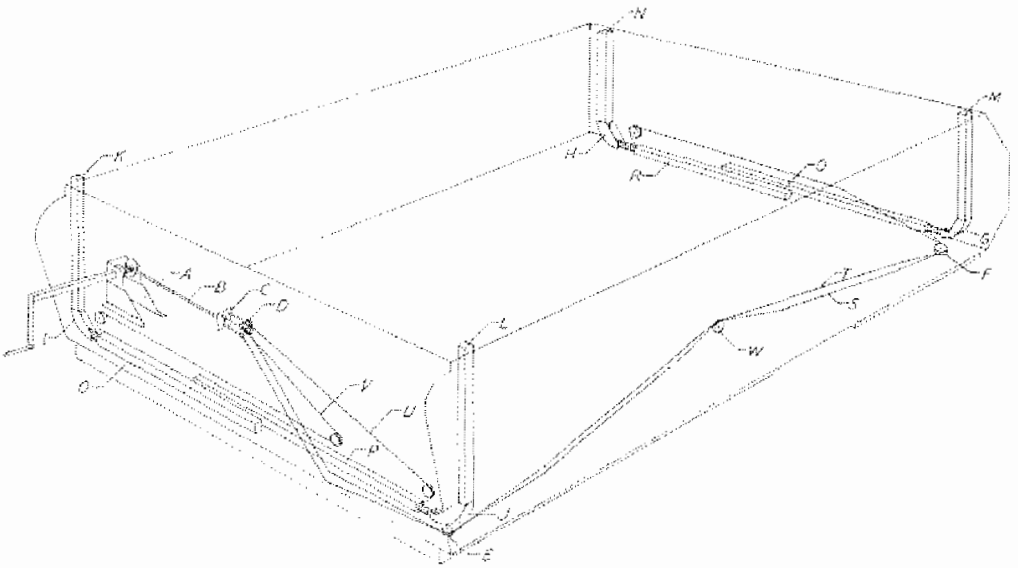

TO OPEN FOR CAMPING: –

1. Release all four corner latches.
2. Turn winch handle until gauge cable in the right front corner appears fairly tight.
3. Drop rear jacks into down position and level trailer.
4. Slide end bunks out ¾ of the way, set up end bunk bows, bring canvas over the bows, pull bunks out and insert bunk support poles under the the bunk. Fasten shock cord around cord holders under the bunk.
5. Enter trailer and lower the screen into position. Raise the screen door against spring tension in the top most panel and position screen door "U" channel over entrance door and black vinyl posts over holes. Now release pressure and allow screen door to drop into place. Secure top panel, inside of roof, by turning twist locks. Insert canvas into door frame extrusion. After door is in place, lower roof enough to put a slight amount of weight on the door frame.

TO CLOSE TRAILER: Reverse above 5 proceedings.

NOTE – After roof is latched, put slight pressure on lift system with (A).

By turning the crank cable (B) is wrapped on the winch spool (A) pulling cables (S,T,U,V) which are anchored to a block within the floor tracks (O,P,Q,R) thus forcing pushrods thru the curved pushrod tracks (G,H,I,J) into corner posts (K,L,M,N) which raise the roof.

A. Winch
B. 3/16" main cable
C. Cable mounting block
D. Adjustable eyebolts
E. Pulley bracket is actually mounted on (J)
F. Pulley bracket is located behind (G)
G,H,I,J. Curved pushrod tracks
K. Right front corner post
L. Left front corner post
M. Left rear corner post
N. Right rear corner post
O. Right front floor track
P. Left front floor track
Q. Left rear floor track
R. Right rear floor track
S. 3/32" cable that powers L,R, pushrod
T. 3/32" cable that powers R,R, pushrod
U. 3/32" cable that powers L,F, pushrod
V. 3/32" cable that powers R,F, pushrod
W. Pulley mounted on wall and above wheel well

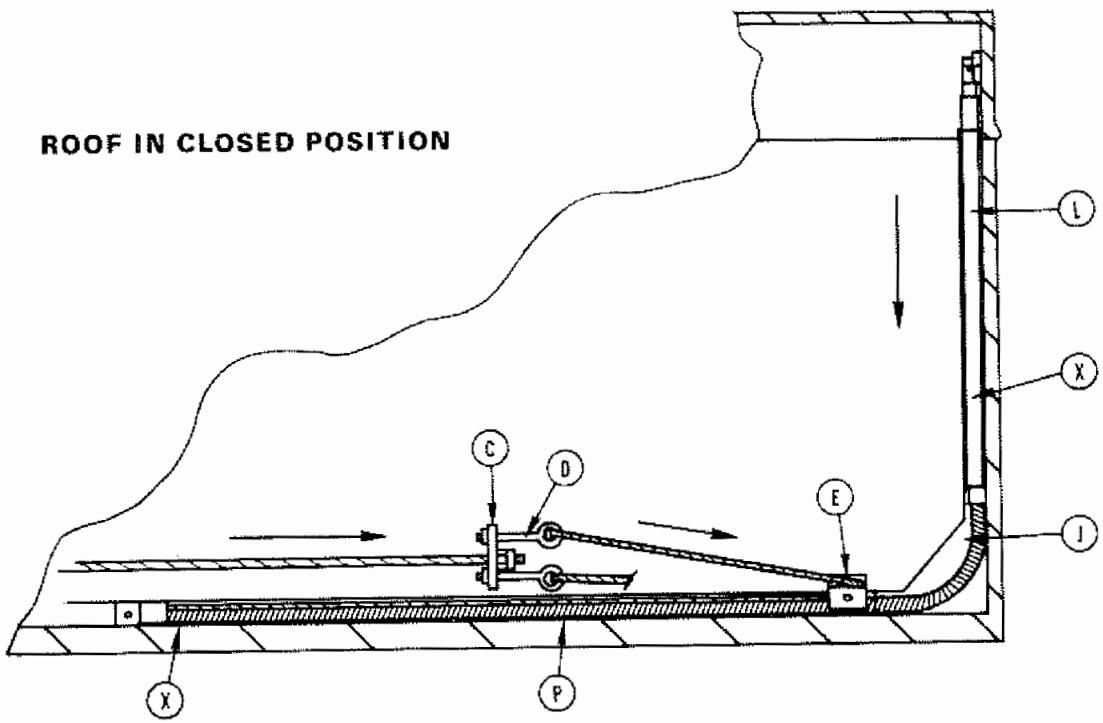

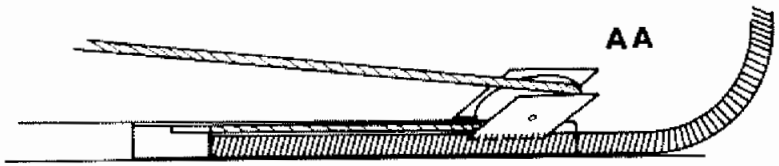

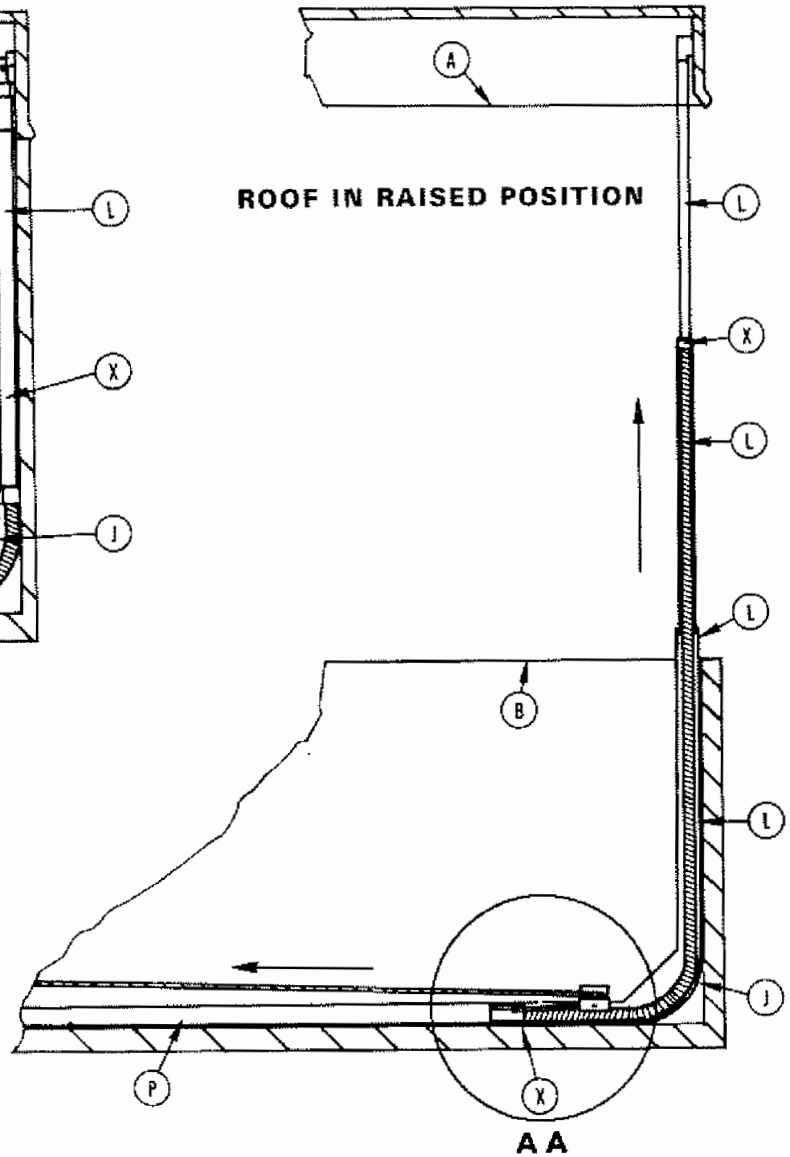

By turning crank on raising and lowering mechanism, main cable is wrapped on winch, thus pulling corner cables which are anchored to block within the floor track, forcing push rod springs into corner posts which raise the roof.

ROOF IN CLOSED POSITION: Position of flexible pushrod in the closed position is between X & X.

D. Adjustable eyebolts
C. Cable mounting block
E. Pulley and bracket
J. Curved pushrod track
L. Left front corner post
P. Push rod housing – (square tube)

ROOF IN RAISED POSITION: To service lift system, place a support between point A & B, Jayeagle, Jayrobin, Jayking, 42", Jaythrush and Jayswift, 48".

Position of pushrod in open position is between X and X.

L. Telescoping square steel tube
P. Pushrod housing (square steel tube)
J. Curved pushrod track

ROOF LATCHES: The roof corner latches are adjustable for more or less tension. Turn the clamp screw to tighten or loosen as is needed.

FRONT & REAR JACKS: The front dolly jack should be completely raised while traveling. Dolly wheel must be removed. This may be done by giving the wheel a quarter turn to the indentation slot.

Rear leveling jacks recessed under the frame of the camper at the rear corners. To swing the jacks into operating position, reach under the camper, grasp the jack body and push away from you. Then pivot the jack down and allow it to spring into locked position. (To return to travel position, pull down on the jack and pivot it back under the camper). Slide the jack foot to ground level and take jack handle, flat end, insert thru jack, applying pressure downward to raise. To release, insert jack foot into catch and raise.

CANVAS: Sometimes dirt can be removed with a dry soft bristle brush, or use warm, mild soapy water to clean canvas. Apply with a damp cloth or sponge. Rinse with cool water and allow to dry thoroughly. (Harsh detergents or solvents will remove water repellency). Be sure that canvas is dry for closed trailer storage, or when traveling, do not have trailer closed with damp canvas for more than 24 hours, because mildew will develop and cause the canvas to rot.

VINYL: The white vinyl ends are the same material as convertible car tops, and can be washed likewise. The clear vinyl windows need to be cleaned with a soft cloth to keep from scratching the soft material.

VENTILATION: Certain weather and atmospheric conditions, i.e. (high humidity, warm inside tent temperatures and low outside temperatures), will cause the vinyl portions of the tent to sweat. This condition can be overcome by unzipping the windows and providing moderate ventilation.

UPHOLSTERY: This fabric meets the code 302 fire retardant standard.

The cushion covers and draperies are made of high quality fabric which is treated with "Scotchgard". To keep them at their best, vacuum, brush, or blot away loose dirt, spills and stains before they become embedded and more difficult to remove. **DO NOT** remove the covers from the cushions. **DO NOT** dry-clean or wash by hand or machine. The vinyl side of the cushions may be cleaned with a foam, vinyl cleaner or hand scrubbed with water and a detergent

HITCH: (2" ball) Be sure that the coupler tongue is properly latched under the ball, and not only sitting on top of the ball. Also, have some spring tension on the latch, which can be adjusted by turning the nut on underside of coupler.

NEW RUB-R-RIDE – SUSPENSION SYSTEM: There is no maintenance to the axle. A step is no longer necessary with the **RUB-R-RIDE** axle.

TABLES: To convert into beds, fold the support leg under the table top, raise the table top until the wall fastening disengages and place table between the seats on the ledges provided.

WATER SYSTEM: Fill the tank through the cup-shaped receptacle outside the camper. Water in the tank is pumped into the sink with a fump pump, except when equipped with a 12 volt electric pump. When equipped with an electric pump, the fump pump comes equipped with a built-in 12 volt pump switch. Pull handle up to activate pump. Be sure 12 volt pump is connected to a 12 volt power supply. Drain 12 volt water pump to prevent freeze damage. Standard Finch model has no water system.

CITY WATER HOOK-UP: Attach hose to the connection on the outside of the camper, and then use the faucet.

ICE BOX: Place ice in the top tray, and a small tube will drain the melted ice water outside of camper.

110 VOLT ELECTRICAL SYSTEM: This is a 3-wire manual reset breaker system with the standard electrical color code as follows: Black/hot, White/neutral, Bare wire/ground. The electrical box is located in the front left bunk. This is typical of the following models: Cardinal, King, Swift, Eagle, Hawk, Robin, Thrush and Finch Deluxe.

12 VOLT POWER CONVERTER SYSTEM: The power converter is supplied with 110 volts through one of the manual reset breakers. The power converter supplies power for the ceiling light and the water pump. The Cardinal and the Finch models have no power converter.

BATTERY PACK SYSTEM: The Cardinal is equipped with a battery pack to operate the water pump and the ceiling lights. The Cardinal comes equipped with a 2 amp charger.

L P GAS SYSTEM: The tubing and connections were checked at the factory with L P gas, but, it would be wise to re-check the connections after installing the L P gas bottle. Use a soap solution around the joints to check for leaks. The Standard Finch has no gas system.

EXTERIOR ALUMINUM: Can be cleaned and waxed, same as any automobile finish.

LOADING: Be certain to load within safe load capacity limits. Too light of a tongue weight will cause trailers to sway while towing.

WIRING CODE:

White – Ground
Green – Right turn signal
Red – Left turn signal
Brown – Clearance lights
Black – 12-volt interior light
Yellow – Back-up light

WIRING CODE: (For U.S. and Canadian trailers after January 1, 1973).

White – Ground
Green – Clearance lights
Red – Left turn signal
Black – 12-volt interior light
Brown – Right turn signal
Yellow – Back-up light

RUNNING GEAR: Check tire inflation.
A. – 18/850 x 8 (P.S.I. -45) Finch only
B. – 20.5/800 x 10 (P.S.I. -50)

Check wheel lug bolts to be sure that they are tight.
Check wheel bearings to see if they are properly lubricated.
Check axle mounting bolts and nuts.

Be sure to check every item after the first 500 miles and after every 1000 miles, or twice during the season.

CHANGE TIRE: While wheel is on ground, loosen wheel lugs, one at a time, driving forward each time the lugs are on the lower side. Turn front jacks down as far as you can, then lower rear jacks as far as you can, next turn front jack as high as possible. This will lift the wheels from the ground. Wheels need to be removed by sliding the bottom side of wheels towards the center of the trailer instead of away from the trailer.

INSTRUCTIONS FOR SANITIZING PORTABLE WATER SYSTEMS OF RECREATIONAL VEHICLES: To assure complete sanitation of your portable water system, it is recommended that the following procedures be followed on a new system, one that has not been used for a period of time, or one that may have become contaminated:

1. Prepare a chlorine solution by using one gallon of water and ¼ cup of Chlorox or Purex household bleach (5% sodium hypochlorite solution). Pour one gallon of this solution into the tank for each 15 gallons of tank capacity.
2. Complete filling of tank with fresh water. Open each faucet and drain cock until all air has been released from the pipes and the entire system is filled.
3. Allow to stand for three hours.
4. Drain and flush with potable fresh water.
5. To remove any excessive chlorine taste or odor which may remain, prepare a solution of one quart of vinegar to five gallons of water and allow this solution to agitate in the tank for several days by vehicle motion.
6. Drain tank and again flush with potable water.

STANDARD SPECIFICATIONS

	JAYCARDINAL	JAYKING	JAYSWIFT	JAYROBIN	JAYEAGLE	JAYHAWK	JAYTHRUSH	JAYFINCH	JAYFINCH D	JAYFLIPPER
Hydraulic surge brakes	x	x	x	Opt.	Opt.	Opt.	Opt.	NA	Opt.	NA
4" steel frame with bumper—12 ga.	x	x	x	x	x	x	x	x	x	3"
Tire size	20/800-10	20/800-10	20/800-10	20/800-10	20/800-10	20/800-10	20/800-10	18/850-8	18/850-8	16/650-8
Easy crankup lifter system (patented)	x	x	x	x	x	x	x	x	x	x
Fully insulated roof	x	x	x	x	x	x	x	x	x	x
Roof vent	x	x	x	x	x	x	x	NO	x	NO
Privacy drapes	x	x	x	x	x	x	x	Opt.	Opt.	Opt.
Window drapes	x	x	x	x	x	x	x	x	x	x
Zippered cushions and mattresses	4"	3"	3"	3"	3"	3"	3"	3"	3"	3"
12 volt ceiling light by Converter	x	x	x	x	x	x	x	NO	NO	NO
12 volt ceiling light by Battery Pack	x									
Two 110V electrical outlets inside	x	x	x	x	x	x	x	NO	x	NO
One exterior 110V hookup outside	x	x	x	x	x	x	x	NO	NO	NO
3 burner stove (Oven[1])	x[1]	x	x	x	x	x	x	NO	x	2 Burner
Slide-out kitchen			x				x			
Icebox	75 lb.	75 lb.	75 lb.	75 lb.	75 lb.	75 lb.	35 lb.	NO	35 lb.	35 lb.
Drawers with nylon rollers and glides	x	x	x	x	x	x	x	x	x	x
Positive catches on all doors and drawers	x	x	x	x	x	x	x	x	x	x
Vinyl coated paneling	x	x	x	x	x	x	x	x	x	x
City water hookup	x	x	x	x	x	x	x	NO	NO	NO
Plastic water tank	x	x	x	x	x	x	x	NO	NO	
12 volt water pump	x	x	x	Opt.	Opt.	Opt.	Opt.	NO	NO	
Porta Potti cabinet (Monomatic toilet opt.[1])	x[1]	x	x	x	x	x	x	NO	NO	NO
Travel height (closed)	52"	52"	45"	52"	52"	52"	45"	44"	44"	46"
Travel length (closed)	18'1"	16'1"	16'1"	14'1"	14'1"	14'1"	14'1"	12'1"	12'1"	11' 6"
Travel width	81"	81"	81"	81"	81"	81"	81"	81"	81"	62"
Raised height (inside)	6'5"	6'5"	6'5"	6'5"	6'5"	6'5"	6'5"	6'5"	6'5"	6' 5"
Raised length (open)	22'	20'	20'	18'	18'	18'	18'	16'	16'	11' 9"[4]
Gas bottle—20 lb.	x	x	x	x	x	x	x	NO	x	NO
Rear mounted swing-down stabilizing jacks	x	x	x	x	x	x	x	x	x	x
Front mounted swing-down stabilizing jacks	x	x	x							
Spare tire mount	x	x	x	x	x	x	x	x	x	x
Awning rail	x	x	x	x	x	x	x	x	x	x
Gross weight	2200[2]	1720[2]	1680[2]	1470[2]	1470[2]	1470[2]	1470[2]	940	1070	790
Gross axle weight rating	3000	2190	2190	2000	2000	2000	2000	1500	1500	1200
Hitch weight	195[3]	195[3]	195[3]	180[3]	180[3]	180[3]	180[3]	137[3]	137[3]	105[3]
Cargo Capacity	600	470	510	530	530	530	530	430	400	400

Litho in U.S.A.

[1]Available on JAYCARDINAL only
[2]Weight listed includes units equipped with heater and refrigerator.
[3]Weight may vary ± 5% depending on gas and water fill.
[4]11' 9" Measurement raised width, instead of raised length.

Jayco JAYCO, INC. | P. O. BOX 460, MIDDLEBURY, INDIANA 46540 | P. O. BOX 414, HARPER, KANSAS 67058