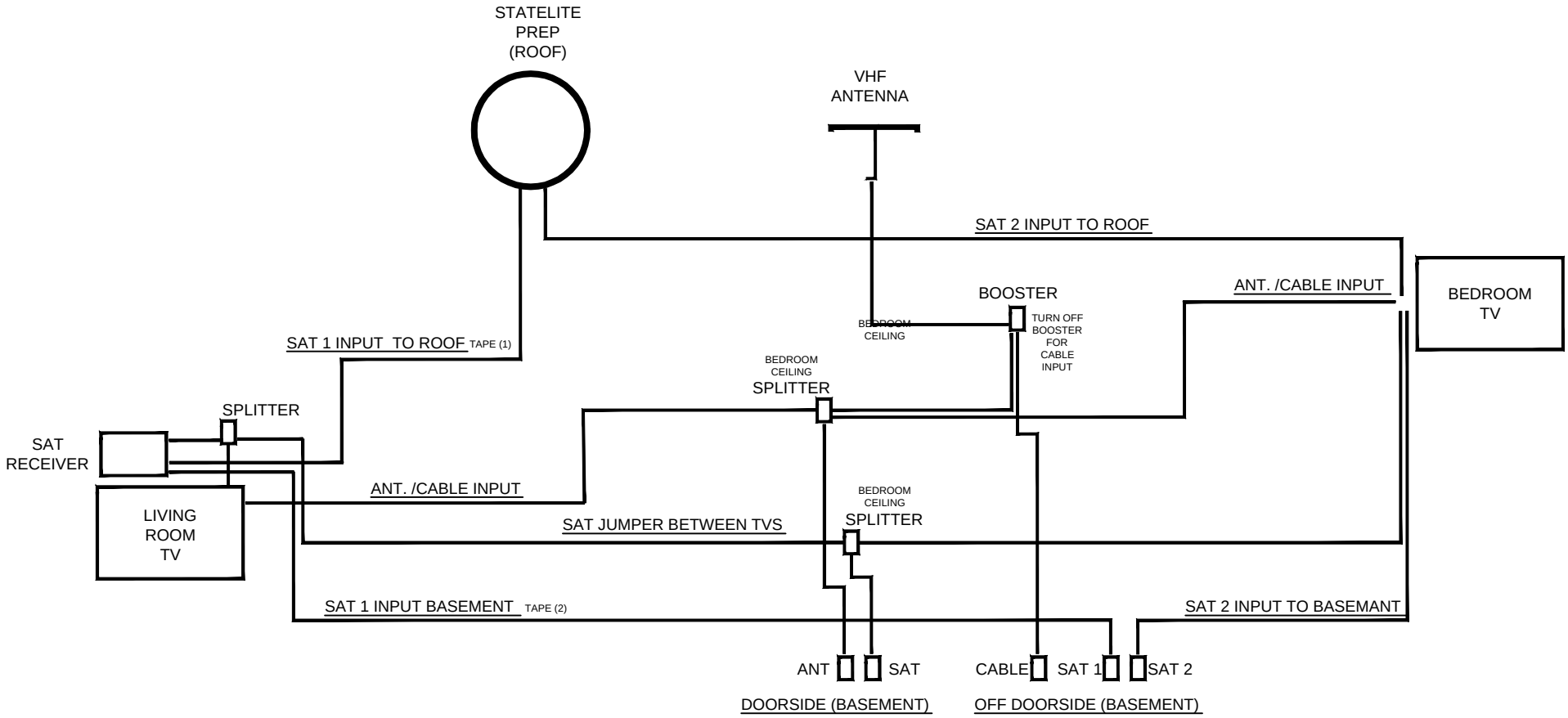

Rev	Date:	Revisions	By
–	–	–	–

REDWOOD
R.V.
72440 State Rd 13
SYRACUSE, IN 46567

Title: ANTENNA / CABLE WIRING DIAGR

Drawn By: DDF	Scale: DNS
Date: 08/15/12	Sheet No. 1 of

DRAWING NUMBER